bc 20, haunched beam in compression

4H-EC3GK version: 10/2012-3j

EC 3-1-8 (12.10), NA: Deutschland

1. input report

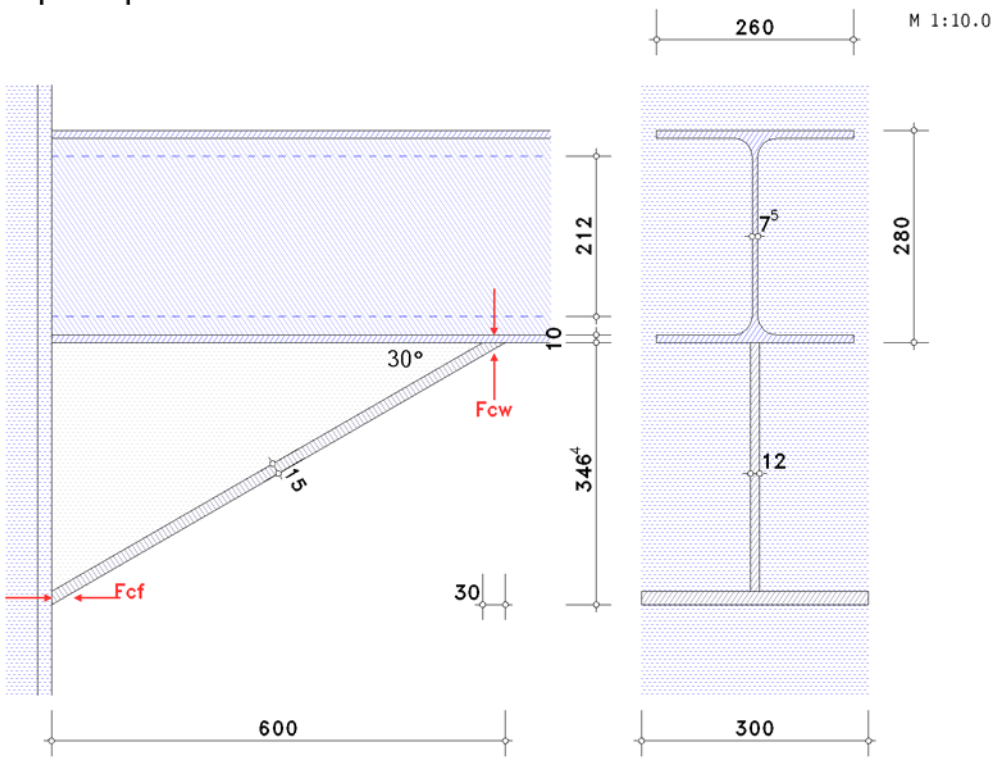

material:
steel grade S275

beam:
height h_b = 280.0 mm, web thickness $t_{w,b}$ = 7.5 mm, flange thickness $t_{f,b}$ = 10.0 mm, flange width $b_{f,b}$ = 260.0 mm
root resp. leg length of the web weld s_b = 24.0 mm
clear depth of the web $d_b = h_b - 2\cdot(t_{f,b}+s_b)$ = 212.0 mm

haunch:
web thickness $t_{w,v}$ = 12.0 mm, flange thickness $t_{f,v}$ = 15.0 mm, flange width $b_{f,v}$ = 300.0 mm
length L_v = 600.0 mm, slope angle α_v = 30.0° $\Rightarrow$ height $h_v = L_v\cdot\tan(\alpha_v)$ = 346.41 mm
cutting length of the haunch flange parallel to the beam flange $s_s = t_{f,v}/\sin(\alpha_v)$ = 30.00 mm

periphery haunch-column:
section class of column 2 (plastic moment resistance, limited rotation capacity)

safety factors: γ_{M0} = 1.00, γ_{M1} = 1.10 (standard)

stress:
lc 1 : $F_{c,f,v,Ed}$ = 15.0 kN $F_{c,f,b,Ed}$ = 150.0 kN

2. calculation

2.1. resistance

assumption: haunch flange no hazard of buckling: $3 \leq 3$ ok

connection haunch-column: (basic component 7: beam flange and web in compression)
resistance only of compression flange (NA-DE: without web, plastic $\Rightarrow$ section class 2)
haunch flange width $b_{f,v}$ = 300.0 mm < max $b_{f,v}$ = 582.4 mm ok
resistance $M_{c,Rd} = M_{pl,Rd} = (W_{pl}\cdot f_y) / \gamma_{M0}$ = 759.71 kNm, W_{pl} = 2762.60 cm³
resistance of a flange (and web) with compression
$F_{c,f,Rd} = M_{c,Rd} / (h - t_f)$ = 1237.50 kN
refering to aspect plane $F_{c,f,Rd}\cdot\cos\alpha_v$ = 1071.71 kN

connection haunch-beam: (basic component 2: Column web in transverse compression)
shear area $A_{v,b}$ = 2999.44 mm²
effective width of web in transverse compression $b_{eff,c} = s_s + 5\cdot(t_{f,b}+s)$ = 200.0 mm
reduction factor k_w = 1.0 ($\sigma_{com,Ed}$ = 0)
plate slenderness $\lambda_p = 0.932\cdot[(b_{eff,c}\cdot d_w\cdot f_y) / (E\cdot t_w^2)]^{1/2}$ = 0.926
reduction factor for web buckling $\rho = (\lambda_p-0.2) / \lambda_p^2$ = 0.847
reduction factor for interaction with shear stress β = 1 $\Rightarrow$ ω = 0.869
resistance of an unstiffened web in transverse compression:
$F_{c,w,Rd} = \omega \cdot (k_w\cdot b_{eff,c}\cdot t_w\cdot f_{y,w}) / \gamma_{M0}$ = 358.34 kN
$F_{c,w,Rd} = \omega \cdot (k_w\cdot\rho\cdot b_{eff,c}\cdot t_w\cdot f_{y,w}) / \gamma_{M1}$ = 275.82 kN (decisive)

resistance refering to aspect plane $F_{c,w,Rd} \cdot \cot \alpha_v$ = 477.74 kN

total loading capacity of a haunched beam in compression

$F_{c,v,Rd} = \min(F_{c,f,Rd} \cdot \cos \alpha_v, F_{c,w,Rd} \cdot \cot \alpha_v)$ = 477.74 kN

2.2. verification

lc 1: periphery haunch-column: F_{Ed} = 15.0 kN < F_{Rd} = 1071.7 kN ⇒ U = 0.014 < 1 ok

periphery haunch-beam: F_{Ed} = 150.0 kN < F_{Rd} = 275.8 kN ⇒ U = 0.544 < 1 ok

total:

lc 1: maximum utilisation U_{max} = 0.544 < 1 ok

verification succeeded