rigid splice with thermal separation layer EC 3-1-8 (12.10), NA: Deutschland 4H-EC3TT version: 3/2016-2r

1. input report

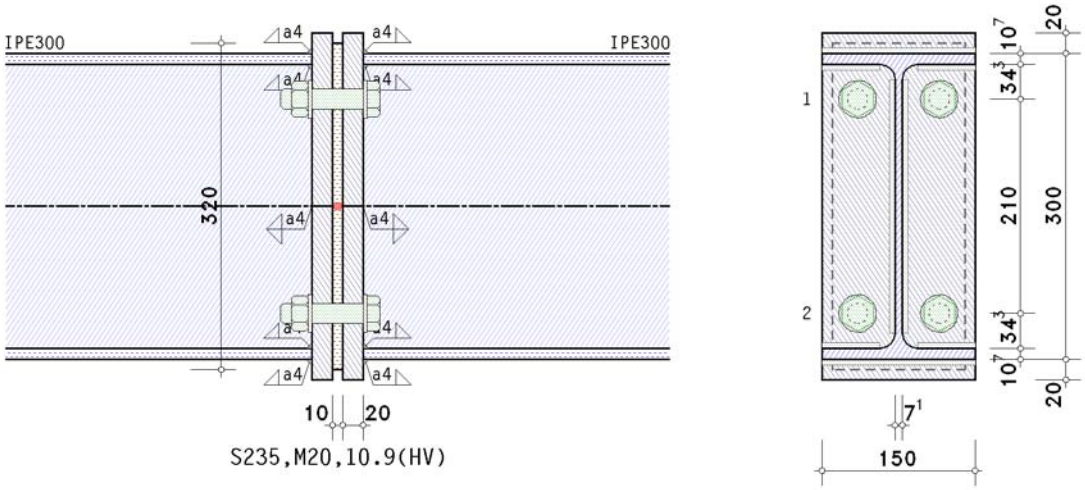

details

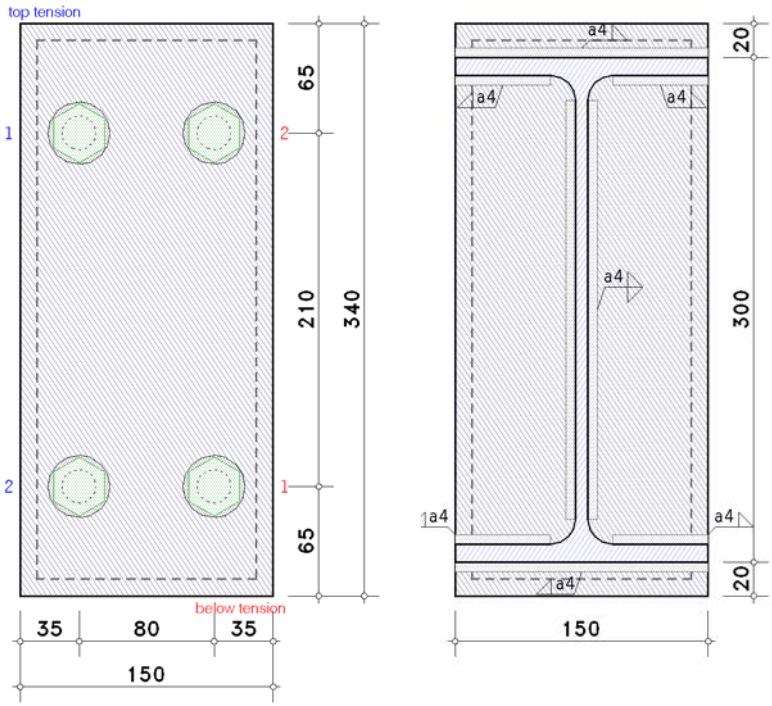

steel grade
steel grade S235
bolts
bolt class 10.9, bolt size M20
large wrench size (high strength bolt), preloaded (s. thermal separation layer parameters)
shaft included in the shear plane
beam parameters
section IPE300
verification parameters
bolted end-plate connection:
end-plate: thickness t_p = 20.0 mm, width b_p = 150.0 mm, length l_p = 340.0 mm
projections $h_{p,o}$ = 20.0 mm, $h_{p,u}$ = 20.0 mm
thermal separation layer (according to Kerncompactlager of Calenberg Ingenieure GmbH):
thickness t_e = 10.0 mm, width b_e = 130.0 mm, length l_e = 320.0 mm
edge distance $ü_e$ = 10.0 mm, safety factor of material γ_e = 1.00, preload force per bolt $F_{p,C}$ = 0.0 kN
bolts in connection:
2 bolt-rows with 2 bolts
all bolt-rows considered individually
all bolt-rows for shear transfer (rows 1-2)
bolt groups generated automatically, considering the decisive group

centre distance of the bolts to the lateral edge of the end-plate e_2 = 35.0 mm
centre distance of the first bolt-row to the upper edge of the end-plate (end row) e_o = 65.0 mm
centre distance of the last bolt-row to the bottom edge of the end-plate (end row) e_u = 65.0 mm
centre distance of the bolt-rows from each other $p_{1\text{-}2}$ = 210.0 mm

welds at the connection point:
beam flange top: fillet weld, weld thickness a = 4.0 mm
beam web: fillet weld, weld thickness a = 4.0 mm
beam flange below: fillet weld, weld thickness a = 4.0 mm

internal forces and moments in the intersection point of system axes

lc 1: Nr.2
$N_{j,b,Ed}$ = -896.00 kN

partial safety factors for material

resistance of cross-sections γ_{M0} = 1.00
resistance of bolts, welds, plates in bearing γ_{M2} = 1.25

notes
connection is verified due to EC 3-1-8 regardless of preloading.
however, connections may be constructed with prestressed high strength bolts.
no verification for cross-sections.

check of data

ok

distances between bolts at end-plate

horizontal:	e_2 = 35.0 mm > 1.2·d_0 = 26.4 mm,	e_2 = 35.0 mm < 4·t + 40 mm = 120.0 mm
horizontal:	p_2 = 80.0 mm > 2.4·d_0 = 52.8 mm,	p_2 = 80.0 mm < min(14·t, 200 mm) = 200.0 mm
top-below:	e_1 = 65.0 mm > 1.2·d_0 = 26.4 mm,	e_1 = 65.0 mm < 4·t + 40 mm = 120.0 mm
top-below:	p_1 = 210.0 mm > 2.2·d_0 = 48.4 mm,	p_1 = 210.0 mm > min(14·t, 200 mm) = 200.0 mm !!
top-below:	e_1 = 65.0 mm > 1.2·d_0 = 26.4 mm,	e_1 = 65.0 mm < 4·t + 40 mm = 120.0 mm

maximum values for spacings and edge distances should be in order to avoid local buckling and to prevent corrosion.

2. lc 1: Nr.2

2.1. design values

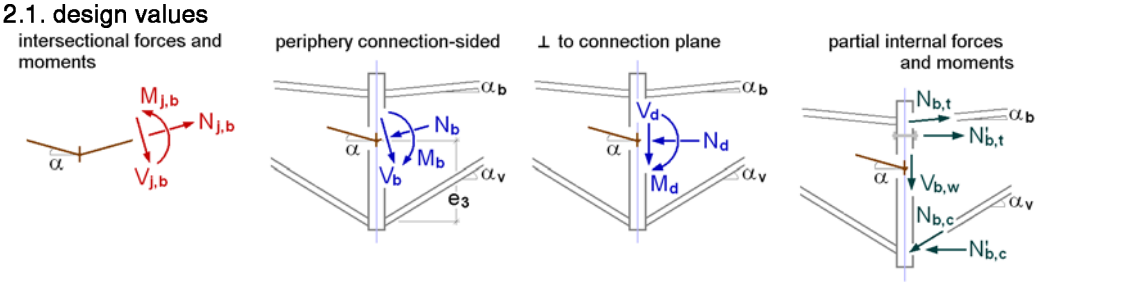

sign definition of statics: a positive axial force means tension, a positive bending moment produces tension at the bottom
⇒ transformation to EC3: a positive axial force means compression, a positive bending moment produces tension at the top

slope angle: $\alpha_b = \alpha = \alpha_v = 0°$

transformation sign convention of statics -> sign convention of EC3
$N_{j,b,Ed}$ = 896.00 kN
transformation node values -> joint values
$N_{b,Ed}$ = 896.00 kN
transformation joint values -> design values
N_d = 896.00 kN

internal forces and moments perpendicular to the connection planes

periphery beam
N_d = 896.00 kN
$|N_{b,Ed}|$ = 896.00 kN > 5%·$N_{pl,Rd}$ = 63.23 kN ⇒ verification with partial internal forces and moments
with $N_{pl,Rd} = A_b \cdot f_{yb} / \gamma_{M0}$ = 1264.58 kN

partial internal forces and moments

internal forces and moments in the periphery end-plate-beam: $M'_d = M_d - V_d \cdot t_p$ = 0.00 kNm
$N_{b,t} = -N_d \cdot z_{bu}/z_b + M'_d/z_b$ = -448.00 kN, z_b = 289.3 mm, z_{bu} = 144.6 mm < 0 (compression connection)
$N_{b,c} = N_d \cdot z_{bo}/z_b + M'_d/z_b$ = 448.00 kN, z_b = 289.3 mm, z_{bo} = 144.6 mm
component method acc. to EC 3-1-8 applies to predominant bending joints !!

2.2. basic components

beam splice w. end-plate: basic components: 5, 7, 8, 10, 11, 12, 15

2.2.1. bc 5: end-plate in bending

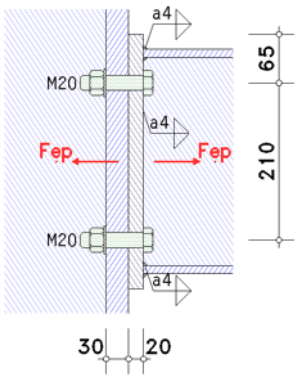

Only the essential sizes are sketched to scale.
The connection geometry is only hinted.

part of end-plate between beam flanges
equivalent T-stub flange (each individual bolt-row):
here: number of bolt-rows $n_b = 1$

row 1

distance centre-line of the bolt to the stiffener $m_2 = 29.8$ mm
distance centre-line of the bolt to the edge of flange $e = 35.0$ mm
distance centre-line of the bolt to the stub web $m = 31.9$ mm

effective length of the T-stub flange (end-plate)

inner bolt-row outside tension flange of beam
coefficient for stiffened column flanges and end-plates:
input values $\lambda_1 = m / (m+e) = 0.477$, $\lambda_2 = m_2 / (m+e) = 0.445 \Rightarrow \alpha = 5.91$ (calculated)
$l_{eff,cp,si} = 2 \cdot \pi \cdot m = 200.6$ mm
$l_{eff,nc,si} = \alpha \cdot m = 188.8$ mm
in mode 1: $\Sigma l_{eff,1} = l_{eff,1} = \min(l_{eff,nc}, l_{eff,cp}) = 188.8$ mm
in mode 2: $\Sigma l_{eff,2} = l_{eff,2} = l_{eff,nc} = 188.8$ mm

tension resistance of the T-stub flange

$n = \min(e_{min}, 1.25 \cdot m) = 35.0$ mm, $e_{min} = 35.0$ mm, $m = 31.9$ mm
resisting plastic moments:
in mode 1+2: $M_{pl,Rd} = (0.25 \cdot \Sigma l_{eff} \cdot t_f^2 \cdot f_y) / \gamma_{M0} = 4.44$ kNm, $t_f = 20.0$ mm, $f_y = 235.0$ N/mm², $\gamma_{M0} = 1.00$
design value of tension resistance:
tension resistance of one bolt: $F_{t,Rd} = (k_2 \cdot f_{ub} \cdot A_s) / \gamma_{M2} = 176.40$ kN, $k_2 = 0.90$, $f_{ub} = 1000.0$ N/mm²
in mode 3: $\Sigma F_{t,Rd} = 2 \cdot n_b \cdot F_{t,Rd} = 352.80$ kN, $n_b = 1$
bolt elongation length $L_b = t_{ges} + t_p + (t_k + t_m)/2 = 68.8$ mm, $t_{ges} = 50.0$ mm
max. bolt elongation length $L_b^* = (8.8 \cdot m^3 \cdot A_s \cdot n_b) / (\Sigma l_{eff,1} \cdot t_f^3) = 46.5$ mm, $n_b = 1$
$L_b = 68.8$ mm > 46.5 mm $= L_b^* \Rightarrow$ no prying forces !
mode 1 and 2: complete yielding of the T-stub flange and possibly coincident bolt failure
$F_{T,1\text{-}2,Rd} = (2 \cdot M_{pl,1,Rd}) / m = 277.91$ kN
mode 3: bolt failure
$F_{T,3,Rd} = \Sigma F_{t,Rd} = 352.80$ kN
tension resistance of the T-stub flange: $F_{T,Rd} = \min(F_{T,1\text{-}2,Rd}, F_{T,3,Rd}) = 277.91$ kN
resistance of a weld (req.1): $f_{1w,d} = f_u / (\beta_w \cdot \gamma_{M2}) = 360.0$ N/mm², $f_u = 360.0$ N/mm², $\beta_w = 0.80$
tension resistance of welds: $F_{T,w,Rd} = 2^{1/2} \cdot f_{1w,d} \cdot a \cdot l_{eff} = 384.42$ kN (≥ 277.91 kN, not decisive)

row 2

distance centre-line of the bolt to the stiffener $m_2 = 29.8$ mm
distance centre-line of the bolt to the edge of flange $e = 35.0$ mm
distance centre-line of the bolt to the stub web $m = 31.9$ mm

effective length of the T-stub flange (end-plate)

inner bolt-row outside tension flange of beam
coefficient for stiffened column flanges and end-plates:
input values $\lambda_1 = m / (m+e) = 0.477$, $\lambda_2 = m_2 / (m+e) = 0.445 \Rightarrow \alpha = 5.91$ (calculated)
$l_{eff,cp,si} = 2 \cdot \pi \cdot m = 200.6$ mm
$l_{eff,nc,si} = \alpha \cdot m = 188.8$ mm
in mode 1: $\Sigma l_{eff,1} = l_{eff,1} = \min(l_{eff,nc}, l_{eff,cp}) = 188.8$ mm
in mode 2: $\Sigma l_{eff,2} = l_{eff,2} = l_{eff,nc} = 188.8$ mm

tension resistance of the T-stub flange

$n = \min(e_{min}, 1.25 \cdot m) = 35.0$ mm, $e_{min} = 35.0$ mm, $m = 31.9$ mm
resisting plastic moments:
in mode 1+2: $M_{pl,Rd} = (0.25 \cdot \Sigma l_{eff} \cdot t_f^2 \cdot f_y) / \gamma_{M0} = 4.44$ kNm, $t_f = 20.0$ mm, $f_y = 235.0$ N/mm², $\gamma_{M0} = 1.00$
design value of tension resistance:
tension resistance of one bolt: $F_{t,Rd} = (k_2 \cdot f_{ub} \cdot A_s) / \gamma_{M2} = 176.40$ kN, $k_2 = 0.90$, $f_{ub} = 1000.0$ N/mm²
in mode 3: $\Sigma F_{t,Rd} = 2 \cdot n_b \cdot F_{t,Rd} = 352.80$ kN, $n_b = 1$
bolt elongation length $L_b = t_{ges} + t_p + (t_k + t_m)/2 = 68.8$ mm, $t_{ges} = 50.0$ mm
max. bolt elongation length $L_b^* = (8.8 \cdot m^3 \cdot A_s \cdot n_b) / (\Sigma l_{eff,1} \cdot t_f^3) = 46.5$ mm, $n_b = 1$
$L_b = 68.8$ mm > 46.5 mm $= L_b^* \Rightarrow$ no prying forces !

mode 1 and 2: complete yielding of the T-stub flange and possibly coincident bolt failure

$F_{T,1\text{-}2,Rd} = (2 \cdot M_{pl,1,Rd}) / m = 277.91$ kN

mode 3: bolt failure

$F_{T,3,Rd} = \Sigma F_{t,Rd} = 352.80$ kN

tension resistance of the T-stub flange: $F_{T,Rd} = \min(F_{T,1\text{-}2,Rd}, F_{T,3,Rd}) = 277.91$ kN

resistance of a weld (req.1): $f_{1w,d} = f_u / (\beta_w \cdot \gamma_{M2}) = 360.0$ N/mm², $f_u = 360.0$ N/mm², $\beta_w = 0.80$

tension resistance of welds: $F_{T,w,Rd} = 2^{1/2} \cdot f_{1w,d} \cdot a \cdot l_{eff} = 384.42$ kN (≥ 277.91 kN, not decisive)

resistances and effective lengths of end-plate in bending (per bolt-row):

$F_{ep,Rd,1} = 277.91$ kN, $l_{eff,1} = 188.8$ mm

$F_{ep,Rd,2} = 277.91$ kN, $l_{eff,2} = 188.8$ mm

equivalent T-stub flange (group of bolts 1):

here: number of bolt-rows $n_b = 2$

row 1

distance centre-line of the bolt to the stiffener $m_2 = 29.8$ mm

distance centre-line of the bolt to the edge of flange $e = 35.0$ mm

distance centre-line of the bolt to the stub web $m = 31.9$ mm

distance between bolt-rows $p = 210.0$ mm

inner bolt-row outside tension flange of beam

coefficient for stiffened column flanges and end-plates:

input values $\lambda_1 = m / (m+e) = 0.477$, $\lambda_2 = m_2 / (m+e) = 0.445 \Rightarrow \alpha = 5.91$ (calculated)

$l_{eff,cp,si} = \pi \cdot m + p = 310.3$ mm

$l_{eff,nc,si} = 0.5 \cdot p + \alpha \cdot m - (2 \cdot m + 0.625 \cdot e) = 208.0$ mm

row 2

distance centre-line of the bolt to the stiffener $m_2 = 29.8$ mm

distance centre-line of the bolt to the edge of flange $e = 35.0$ mm

distance centre-line of the bolt to the stub web $m = 31.9$ mm

distance between bolt-rows $p = 210.0$ mm

inner bolt-row outside tension flange of beam

coefficient for stiffened column flanges and end-plates:

input values $\lambda_1 = m / (m+e) = 0.477$, $\lambda_2 = m_2 / (m+e) = 0.445 \Rightarrow \alpha = 5.91$ (calculated)

$l_{eff,cp,si} = \pi \cdot m + p = 310.3$ mm

$l_{eff,nc,si} = 0.5 \cdot p + \alpha \cdot m - (2 \cdot m + 0.625 \cdot e) = 208.0$ mm

effective length of the T-stub flange (end-plate)

in mode 1: $\Sigma l_{eff,1} = \min(\Sigma l_{eff,nc}, \Sigma l_{eff,cp}) = 416.1$ mm, $\Sigma l_{eff,cp} = 620.6$ mm

in mode 2: $\Sigma l_{eff,2} = \Sigma l_{eff,nc} = 416.1$ mm

tension resistance of the T-stub flange

$n = \min(e_{min}, 1.25 \cdot m) = 35.0$ mm, $e_{min} = 35.0$ mm, $m = 31.9$ mm

resisting plastic moments:

in mode 1+2: $M_{pl,Rd} = (0.25 \cdot \Sigma l_{eff} \cdot t_f^2 \cdot f_y) / \gamma_{M0} = 9.78$ kNm, $t_f = 20.0$ mm, $f_y = 235.0$ N/mm², $\gamma_{M0} = 1.00$

design value of tension resistance:

tension resistance of one bolt: $F_{t,Rd} = (k_2 \cdot f_{ub} \cdot A_s) / \gamma_{M2} = 176.40$ kN, $k_2 = 0.90$, $f_{ub} = 1000.0$ N/mm²

in mode 3: $\Sigma F_{t,Rd} = 2 \cdot n_b \cdot F_{t,Rd} = 705.60$ kN, $n_b = 2$

bolt elongation length $L_b = t_{ges} + t_p + (t_k + t_m)/2 = 68.8$ mm, $t_{ges} = 50.0$ mm

max. bolt elongation length $L_b^* = (8.8 \cdot m^3 \cdot A_s \cdot n_b) / (\Sigma l_{eff,1} \cdot t_f^3) = 42.1$ mm, $n_b = 2$

$L_b = 68.8$ mm > 42.1 mm $= L_b^* \Rightarrow$ no prying forces !

mode 1 and 2: complete yielding of the T-stub flange and possibly coincident bolt failure

$F_{T,1\text{-}2,Rd} = (2 \cdot M_{pl,1,Rd}) / m = 612.58$ kN

mode 3: bolt failure

$F_{T,3,Rd} = \Sigma F_{t,Rd} = 705.60$ kN

tension resistance of the T-stub flange: $F_{T,Rd} = \min(F_{T,1\text{-}2,Rd}, F_{T,3,Rd}) = 612.58$ kN

resistance of a weld (req.1): $f_{1w,d} = f_u / (\beta_w \cdot \gamma_{M2}) = 360.0$ N/mm², $f_u = 360.0$ N/mm², $\beta_w = 0.80$

tension resistance of welds: $F_{T,w,Rd} = 2^{1/2} \cdot f_{1w,d} \cdot a \cdot l_{eff} = 847.35$ kN (≥ 612.58 kN, not decisive)

resistance and effective length of end-plate in bending (decisive group of bolts)

$F_{t,ep,Rd} = 612.58$ kN, $\Sigma l_{eff} = 416.1$ mm, 2 rows

2.2.2. bc 7: beam flange and web in compression

section class of the beam (ε = 1.00):
flange top
section class 1 for α = 1.000, c/t = 5.28 (outstand flange) < 9.00·ε = 9.00
flange below
section class 1 for α = 1.000, c/t = 5.28 (outstand flange) < 9.00·ε = 9.00
web
section class 2 for α = 1.000, c/t = 35.01 (internal compression parts) < 38.00·ε = 38.00
total: section class 2

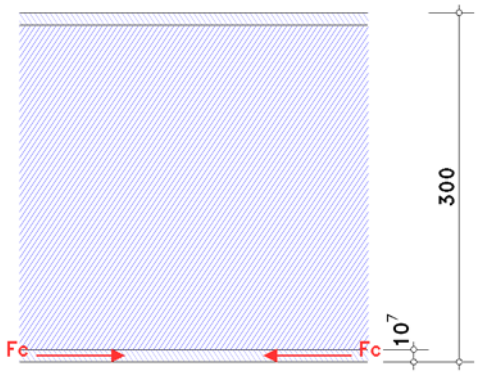

Only the essential sizes are sketched to scale.
The connection geometry is only hinted.

stress for section class 2
resistance $M_{c,Rd} = M_{pl,Rd} = (W_{pl} \cdot f_y) / \gamma_{M0}$ = 147.65 kNm, W_{pl} = 628.29 cm³
resistance of a flange (and web) with compression
$F_{c,f,Rd} = M_{c,Rd} / (h - t_f)$ = 510.36 kN, $(h - t_f)$ = 289.3 mm

resistance of the upper beam flange:
stress for section class 2
resistance $M_{c,Rd} = M_{pl,Rd} = (W_{pl} \cdot f_y) / \gamma_{M0}$ = 147.65 kNm, W_{pl} = 628.29 cm³
resistance of a flange (and web) with compression
$F_{c,f,Rd} = M_{c,Rd} / (h - t_f)$ = 510.36 kN, $(h - t_f)$ = 289.3 mm

2.2.3. bc 8: beam web in tension

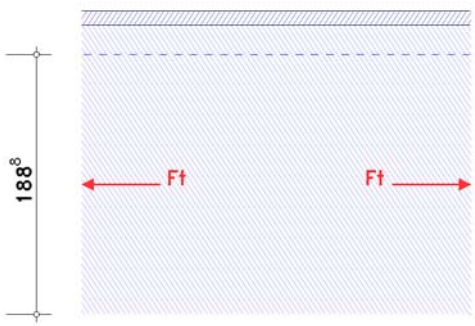

Only the essential sizes are sketched to scale.
The connection geometry is only hinted.

each individual bolt-row:
row 1
effective width
effective width of the beam web in tension $b_{eff,t,wb}$ = 188.8 mm (l_{eff} from bc 5)
resistance of a beam web in tension
$F_{t,wb,Rd} = b_{eff,t,wb} \cdot t_{wb} \cdot f_{y,wb} / \gamma_{M0}$ = 315.0 kN, $f_{y,wb}$ = 235.0 N/mm²
row 2
effective width
effective width of the beam web in tension $b_{eff,t,wb}$ = 188.8 mm (l_{eff} from bc 5)
resistance of a beam web in tension
$F_{t,wb,Rd} = b_{eff,t,wb} \cdot t_{wb} \cdot f_{y,wb} / \gamma_{M0}$ = 315.0 kN, $f_{y,wb}$ = 235.0 N/mm²
eine group of bolt-rows decisive:
effective width
effective width of the beam web in tension $b_{eff,t,wb}$ = 416.1 mm (l_{eff} from bc 5)
resistance of a beam web in tension
$F_{t,wb,Rd} = b_{eff,t,wb} \cdot t_{wb} \cdot f_{y,wb} / \gamma_{M0}$ = 694.2 kN, $f_{y,wb}$ = 235.0 N/mm²

2.2.4. bc 10: bolts in tension

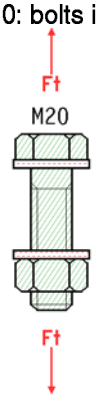

Only the essential sizes are sketched to scale.
The connection geometry is only hinted.

bolt category D:
tension resistance of one bolt: $F_{t,Rd} = (k_2 \cdot f_{ub} \cdot A_s) / \gamma_{M2} = 176.40$ kN, $k_2 = 0.90$, $f_{ub} = 1000.0$ N/mm²
p. sh. load capicity: $B_{p,Rd} = (0.6 \cdot \pi \cdot d_m \cdot t_p \cdot f_u)) / \gamma_{M2} = 363.88$ kN, $d_m = 33.5$ mm, $t_p = 20.0$ mm, $f_u = 360.0$ N/mm²
tension-/punching shear load capicity for 2 bolts: $\Sigma F_{tp,Rd} = 2 \cdot \min(F_{t,Rd}, B_{p,Rd}) = 352.80$ kN

2.2.5. bc 11: bolts in shear

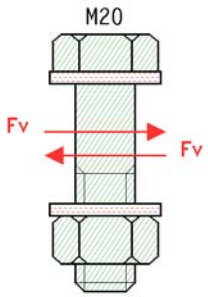

Only the essential sizes are sketched to scale.
The connection geometry is only hinted.

bolt category A:
shaft included in the shear plane: $\alpha_v = 0.6$, $A = 3.14$ cm²
shear resistance per shear plane: $F_{v,Rd} = \alpha_v \cdot f_{ub} \cdot A / \gamma_{M2} = 150.80$ kN, $f_{ub} = 1000.0$ N/mm²
shear resistance of 2 bolts (1-shear): $\Sigma F_{v,Rd} = 2 \cdot F_{v,Rd} = 301.59$ kN

2.2.6. bc 12: plate with bearing resistance

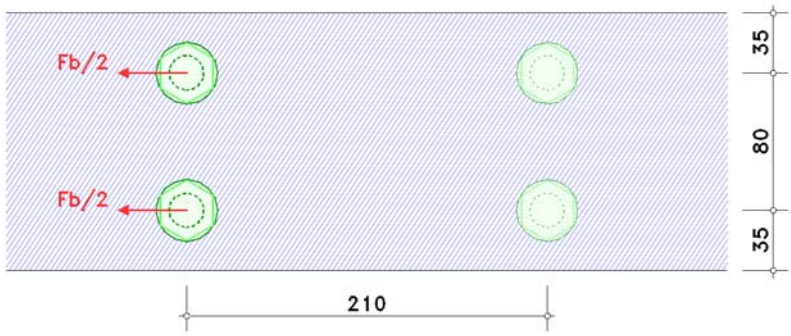

row 1
bolt 1:
in direction of load transfer: $\alpha_b = 1.00$
across to the direction of load transfer: $k_{1,i} = 1.4 \cdot p_2/d_0 - 1.7 = 3.39$ (inner bolt)
across to the direction of load transfer: $k_{1,a} = \min(2.8 \cdot e_2/d_0 - 1.7, 1.4 \cdot p_2/d_0 - 1.7) = 2.75$ (end bolt)
$\Rightarrow k_1 = 2.50$ (smallest value of k_1 or 2.5)
bearing resistance: $F_{b,Rd} = (k_1 \cdot \alpha_b \cdot f_u \cdot d \cdot t) / \gamma_{M2} = 288.00$ kN, $f_u = 360.0$ N/mm², $t = 20.0$ mm, $d = 20.0$ mm
bolt 2:
in direction of load transfer: $\alpha_b = 1.00$
across to the direction of load transfer: $k_{1,i} = 1.4 \cdot p_2/d_0 - 1.7 = 3.39$ (inner bolt)
across to the direction of load transfer: $k_{1,a} = \min(2.8 \cdot e_2/d_0 - 1.7, 1.4 \cdot p_2/d_0 - 1.7) = 2.75$ (end bolt)
$\Rightarrow k_1 = 2.50$ (smallest value of k_1 or 2.5)
bearing resistance: $F_{b,Rd} = (k_1 \cdot \alpha_b \cdot f_u \cdot d \cdot t) / \gamma_{M2} = 288.00$ kN, $f_u = 360.0$ N/mm², $t = 20.0$ mm, $d = 20.0$ mm
bearing resistance of 1x2 bolts: $\Sigma F_{b,Rd} = 576.00$ kN
row 2
bolt 1:
in direction of load transfer: $\alpha_b = 1.00$
across to the direction of load transfer: $k_{1,i} = 1.4 \cdot p_2/d_0 - 1.7 = 3.39$ (inner bolt)

across to the direction of load transfer: $k_{1,a} = \min(2.8 \cdot e_2/d_0 - 1.7,\ 1.4 \cdot p_2/d_0 - 1.7) = 2.75$ (end bolt)
$\Rightarrow$ $k_1 = 2.50$ (smallest value of k_1 or 2.5)
bearing resistance: $F_{b,Rd} = (k_1 \cdot \alpha_b \cdot f_u \cdot d \cdot t) / \gamma_{M2} = 288.00$ kN, $f_u = 360.0$ N/mm², $t = 20.0$ mm, $d = 20.0$ mm
bolt 2:
in direction of load transfer: $\alpha_b = 1.00$
across to the direction of load transfer: $k_{1,i} = 1.4 \cdot p_2/d_0 - 1.7 = 3.39$ (inner bolt)
across to the direction of load transfer: $k_{1,a} = \min(2.8 \cdot e_2/d_0 - 1.7,\ 1.4 \cdot p_2/d_0 - 1.7) = 2.75$ (end bolt)
$\Rightarrow$ $k_1 = 2.50$ (smallest value of k_1 or 2.5)
bearing resistance: $F_{b,Rd} = (k_1 \cdot \alpha_b \cdot f_u \cdot d \cdot t) / \gamma_{M2} = 288.00$ kN, $f_u = 360.0$ N/mm², $t = 20.0$ mm, $d = 20.0$ mm
bearing resistance of 1x2 bolts: $\Sigma F_{b,Rd} = 576.00$ kN

bearing resistance (2 rows)
$\Sigma F_{b,Rd,1} = 576.00$ kN
$\Sigma F_{b,Rd,2} = 576.00$ kN

2.2.7. bc 15: end-plate with thermal separation layer

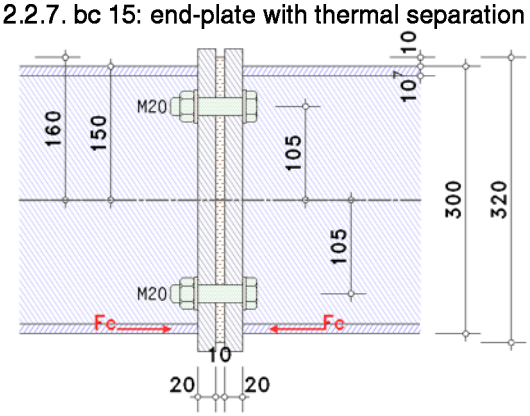

Only the essential sizes are sketched to scale.
The connection geometry is only hinted.

calculation is for structural bearings according to Kerncompactlager of Calenberg Ingenieure GmbH.
calculation method is also appropriate for the connection of a steel girder to a reinforced concrete column
bolts are verified with the thread in the shear plane.

effective length of separation layer:
charakteristic member forces regarding axis of separation layer (e = 0.0 mm) N = 640.00 kN
elastic stresses top/below $\sigma_o = -15.38$ N/mm², $\sigma_u = -15.38$ N/mm²
zero point $z_0 = 160.0$ mm $\geq$ 160.0 mm (compressed)
bolt force in the elastic tension zone (0 bolt-rows) $\Sigma F_{r,i} = 0.0$ kN, $\Sigma(F_{r,i} \cdot z_{r,i}) = 0.00$ kNm
effective length of separation layer $h_m = 2 \cdot (z + (M + \Sigma(F_{r,i} \cdot z_{r,i}))/(N + \Sigma F_{r,i})) = 320.0$ mm, $z = 160.0$ mm
mean compressive stress $\sigma_m = (N + \Sigma F_{r,i})^2 / (b_e \cdot [2 \cdot z \cdot (N + \Sigma F_{r,i}) + 2 \cdot (M + \Sigma(F_{r,i} \cdot z_{r,i}))]) = 15.38$ N/mm²

verification of the separation layer:
number of bolts in the effective compression zone (2 bolt-rows) $n_d = 4$
shape factor $S = (h_m \cdot b_e - n_d \cdot A_s) / (t_e \cdot (2 \cdot (h_m + b_e) + n_d \cdot U_s)) = 3.407$, $A_s = \pi \cdot (d + \Delta d)^2/4 = 380.1$ mm², $U_s = \pi \cdot (d + \Delta d) = 69.1$ mm
permissible mean compressive stress $\sigma_{m,zul} = (S^2 + S + 1)/0.7 = 22.88$ N/mm² < 30 N/mm²
utilisation of the separation layer $\sigma_m/\sigma_{m,zul} = 0.673 < 1$ ok

resistance of an end-plate connection with thermal separation layer:
effective width of the separation layer $b_{eff} = t_{fb} + 2^{1/2} \cdot a_p + 1.25 \cdot t_p + t_e/2 + \ddot{u}_b = 56.4$ mm, $\ddot{u}_b = 10.0$ mm, $a_p = 4.0$ mm
effective area of the separation layer $A_{eff} = b_e \cdot b_{eff} = 73.26$ cm²
$F_{c,e,Rd} = A_{eff} \cdot f_e / \gamma_{Me} = 167.6$ kN, $f_e = \sigma_{m,zul} = 22.88$ N/mm², $\gamma_{Me} = 1.00$

2.3. verifications

internal lever arm z = 289.3 mm

2.3.1. verification of the connection capacity with partial internal forces and moments

tension force in the bolt-rows:
$N'_{b,t} = (-N_d \cdot z_{bu}) / z = -448.00$ kN, $z = z_b = 289.3$ mm, $z_{bu} = 144.6$ mm < 0 (no relevance)
compression force
$N'_{b,c} = (N_d \cdot z_{bo}) / z = 448.00$ kN, $z = z_b = 289.3$ mm, $z_{bo} = 144.6$ mm

bc 5: $F_{Rd} = \min(\Sigma F_{t,ep,Rd,i},\ F_{t,ep,Rd}) = 277.9$ kN, $F_{Ed} = N'_{b,t} = -448.00$ kN ≤ 0 **no verification**
bc 7: flange: $F_{Rd} = F_{c,f,Rd} = 510.4$ kN, $F_{Ed} = N'_{b,c} = 448.00$ kN
$F_{Ed} = 448.0$ kN < $F_{Rd} = 510.4$ kN $\Rightarrow$ $U = 0.878 < 1$ ok
bc 8: $F_{Rd} = \min(\Sigma F_{t,wb,Rd,i},\ F_{t,wb,Rd}) = 315.0$ kN, $F_{Ed} = N'_{b,t} = -448.00$ kN ≤ 0 **no verification**
bc 10: $F_{Rd} = \Sigma 0.95 \cdot F_{t,Rd,i} = 670.3$ kN, $F_{Ed} = N'_{b,t} = -448.00$ kN ≤ 0 **no verification**
bc 11: $F_{Rd} = \Sigma F_{v,Rd}/2 = 301.6$ kN, $F_{Ed} = |V_d|/2 = 0.00$ kN ≤ 0 **no verification**
bc 12: $F_{Rd} = \Sigma F_{b,Rd}/2 = 576.0$ kN, $F_{Ed} = |V_d|/2 = 0.00$ kN ≤ 0 **no verification**
bc 15: $F_{Rd} = F_{c,e,Rd} = 167.6$ kN, $F_{Ed} = N'_{b,c} = 448.00$ kN
$F_{Ed} = 448.0$ kN > $F_{Rd} = 167.6$ kN $\Rightarrow$ $U = 2.673 > 1$ **not ok !!**

utilisation partial internal forces and moments $U_{bc} = 2.673 > 1$ **not ok !!**

2.3.2. verification result

maximum utilisation: max U = 2.673 > 1 **not ok !!**
failure at verification with partial internal forces and moments: U = 2.673

3. final result

thermal separation layer:	max U_e = 0.673 < 1 ok
maximum utilisation:	max U = 2.673 > 1 **not ok !!**

resistance not ensured !!
total loading capacity of the connection may not be guaranteed (s. notes) !

4. Regulations

EN 1990, Eurocode 0: Grundlagen der Tragwerksplanung;
Deutsche Fassung EN 1990:2002 + A1:2005 + A1:2005/AC:2010, Ausgabe Dezember 2010
EN 1990/NA, Nationaler Anhang zur EN 1990, Ausgabe Dezember 2010

EN 1993-1-1, Eurocode 3: Bemessung und Konstruktion von Stahlbauten -
Teil 1-1: Allgemeine Bemessungsregeln und Regeln für den Hochbau;
Deutsche Fassung EN 1993-1-1:2005 + AC:2009, Ausgabe Dezember 2010
EN 1993-1-1/A1, Ergänzungen zur EN 1993-1-1, Ausgabe Juli 2014
EN 1993-1-1/NA, Nationaler Anhang zur EN 1993-1-1, Ausgabe Dezember 2018

EN 1993-1-8, Eurocode 3: Bemessung und Konstruktion von Stahlbauten -
Teil 1-8: Bemessung von Anschlüssen;
Deutsche Fassung EN 1993-1-8:2005 + AC:2009, Ausgabe Dezember 2010
EN 1993-1-8/NA, Nationaler Anhang zur EN 1993-1-8, Ausgabe Dezember 2010

Druckschrift Kerncompactlager, Calenberg Ingenieure GmbH, Salzhemmendorf,
www.calenberg-ingenieure.de